2215 E. BROOKLYN AVE - SPOKANE, WA 99217
TOLL FREE 1-800-888-4573
(509) 325-4573 FAX (509) 325-5098
SPOKANE - LEWISTON - YAKIMA
www.wilbertprecast.com

30" I.D. Grade
Adjustment Ring

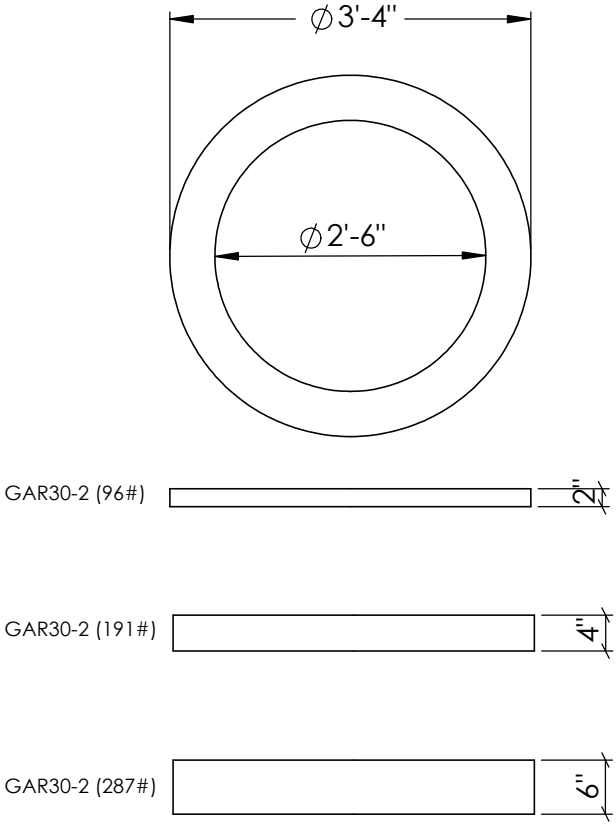

REINFORCEMENT:
4" AND 6" EACH CONTAIN 1 HOOP
OF #4 BAR

PRODUCT NAME

GRADE ADJUSTMENT RING DETAILS

MODEL #:

GAR30-2", GAR30-4", GAR30-6"